ALLA
บริษัท อลล่า จำกัด (มหาชน)
ALLA PUBLIC COMPANY LIMITED.

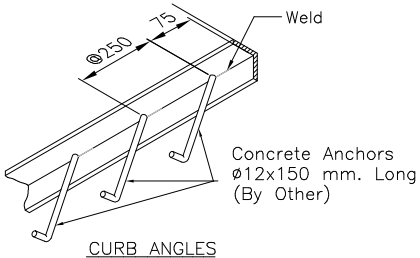

CURB ANGLES

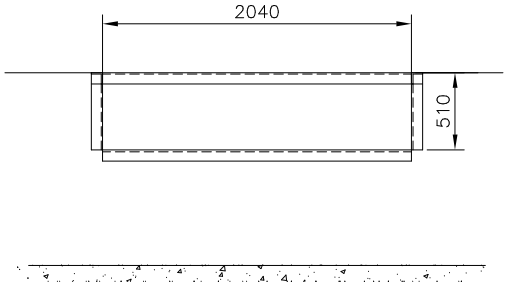

FRONT VIEW

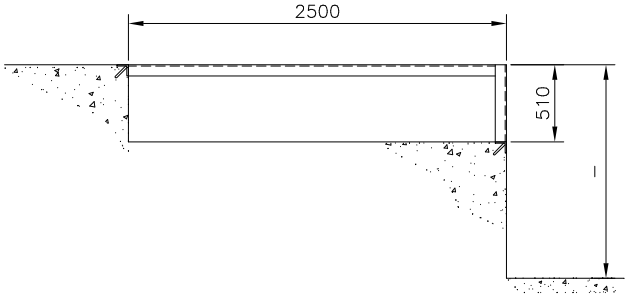

SIDE VIEW

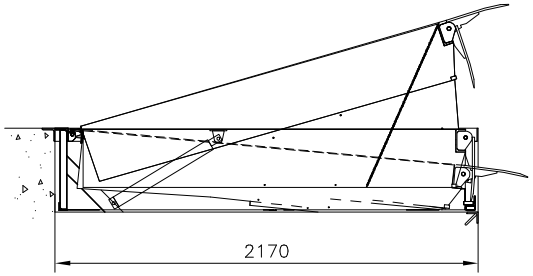

SWING LIP

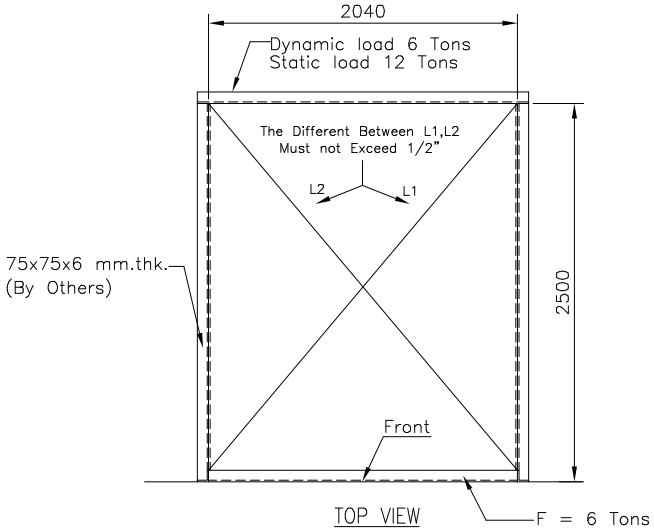

TOP VIEW

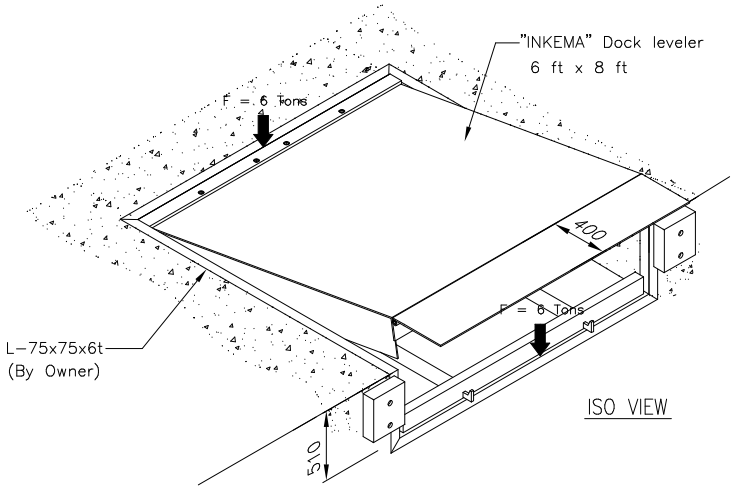

ISO VIEW

TECHNICAL SPECIFICATION		
1	model	DHL-
2	Dimension	W 2000 mm x L 2500 mm x H 500 mm
3	Pit Dimension	W 2040 mm x L 2500 mm x H 500/510 mm
4	Capacity	6 tons
5	Lip Length	400 mm
6	Operating Range	Above 330 mm / Below 300 mm
7	Control type	Mechanical balance Spring
8	Finising	Black (RAL 9005)
9	Frame Structure	Steel paint with RAL colour coating
10	Bumper	2 pcs W250 mm x H450 mm x D100 mm

"Rockies" Mechanical Dock leveler 2000 x2500 mm.

Customer : -
Project : -

Size A3 | Scale NTS | Page 1

Job No. : XX xxxxx | Item No. : 1

Drawing No. : DR2001-xxx | Rev. : 0

ALLA
บริษัท อลล่า จำกัด (มหาชน)
ALLA PUBLIC COMPANY LIMITED

Rev.	Date	Submit for	Designed	Drawn	Checked	Approved
2						
1						
0	xx/xx/xx	Information	ALLA	T.Chaopraya		

FM-SS-01-03_Rev.4